# HCP PUMP

| | |
|---|---|
| **Series** | **AF** |
| **Modelo** | **80AFU22.2** |
| **Frecuencia** | **50** |
| **Fase / Voltaje** | **3 Ø / 380 V** |
| **Corriente Nominal** | **5 A** |
| **Descarga** | **80 mm (3")** |




## Datos del Motor

| | |
|---|---|
| Potencia de Entrada - P1 | 2.95 kW |
| Potencia Nominal - P2 | 2.2 kW |
| Clase de Aislamiento | F |
| Cantidad Máxima de Arranques por Hora | 10 |
| Velocidad de Rotación Estándar | 2840 |
| Método de Arranque | DOL |
| Índice de Protección IP | IP68 |
| A Prueba de Explosiones | NO |

## Tecnología

| | |
|---|---|
| Tipo de Impulsor | Vortex |
| Sello Mecánico | Double |
| Aceite Lubricante VG32 | 850 CC |
| Paso Sólido | 50 mm (2") |
| Tipo de Refrigeración | External cooling |
| Camisa de Refrigeración | NO |

## Material

| | |
|---|---|
| Bastidor del Motor | FC200 (GG-20) |
| Eje | SUS403 ( (X5Cr13) |
| Carcasa | FC200 (GG-20) |
| Impulsor | FC200 (GG-20) |
| Sello Mecánico | CA/CE&SiC/SiC |
| Cable | VCT,H07RN-F |
| Rodamientos Superior e Inferior | 6204ZZ,6305ZZ |

## Fluido

| | |
|---|---|
| Temperatura Ambiente Máxima | 0~40°C (32~104°F) |
| Profundidad Máxima de Instalación | 20m (66ft) |
| Temperatura Máxima del Fluido | 40 °C (104°F) |
| Fluido Bombeado | Sewage |

## Otros (Opcional)

| | |
|---|---|
| Dispositivo de Protección | Auto-cut Protector (MTS) |
| Sensor de Humedad | (MS) |

# HCP PUMP

| PUMP PERFORMANCE CURVES | | | |
|---|---|---|---|
| **Modelo** | 80AFU22.2 | **N.º de archivo** | 20261021225019 |
| **Frecuencia** | 50 Hz | **N.º de versión** | 202003060911 |
| **Descarga** | 3" / 80 mm | **REFERENCE SPECIFICATION** | |
| **Potencia** | 3 HP / 2.2 kW | **Salida** | 1.96 kW |
| **Altura Estándar** | 12.5 m | **Eficiencia** | 43.7 % |
| **Capacidad Estándar** | 24 m³/h | | |
| **Fase / Voltaje** | 3 Ø / 380 V | | |
| **Corriente Nominal** | 5 A | | |
| **Polo / rpm** | 2 P / 2840 rpm | | |
| **Método de Arranque** | DOL | | |
| **Clase de Aislamiento** | F | | |

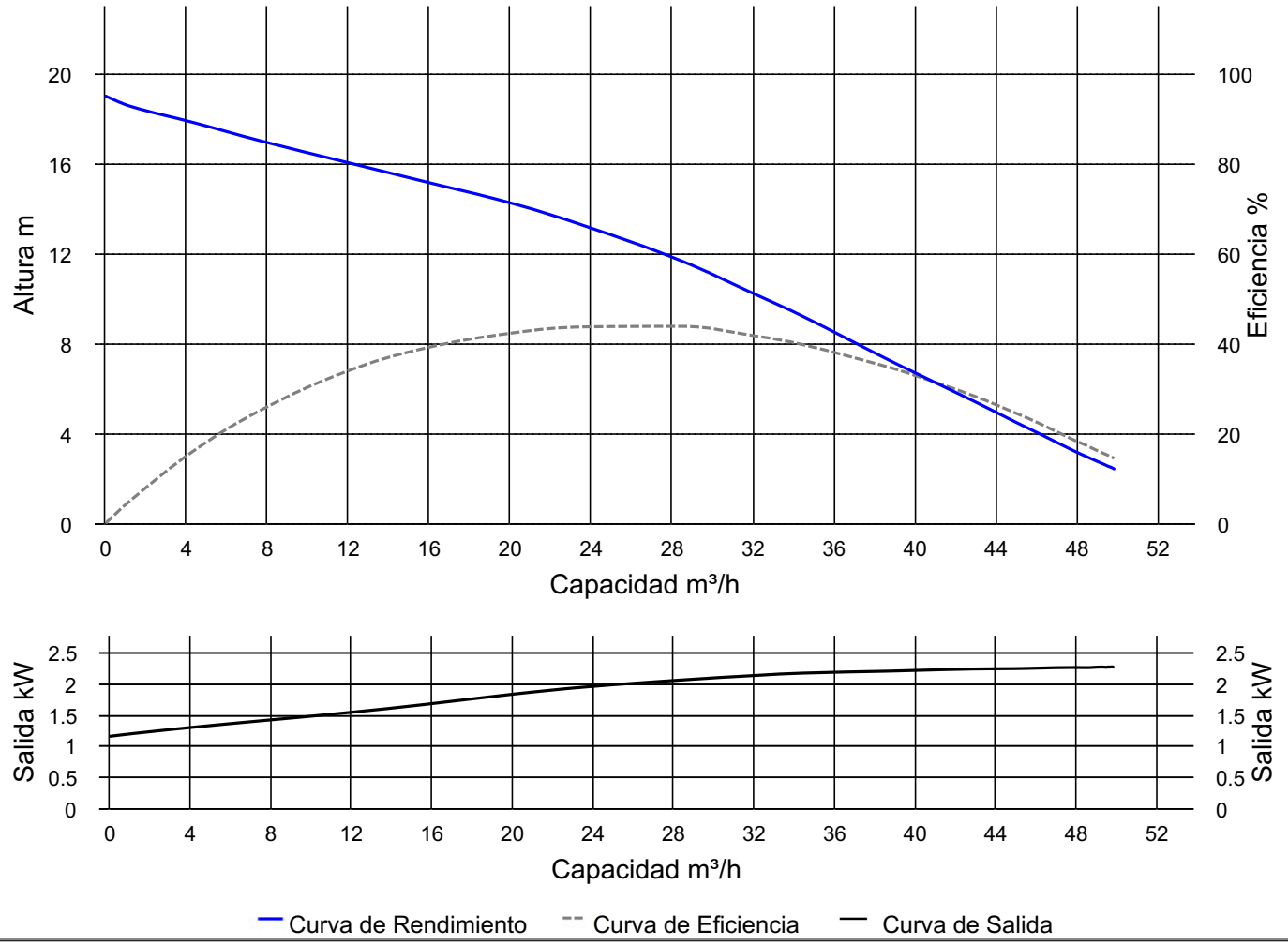


**HCP PUMP MANUFACTURER CO., LTD.**

## DIMENSIONS NO: S3AFU222032-00

## MODEL: 80AFU21.5 / 22.2 / 21.5L / 22.2L 1Ø / 3Ø

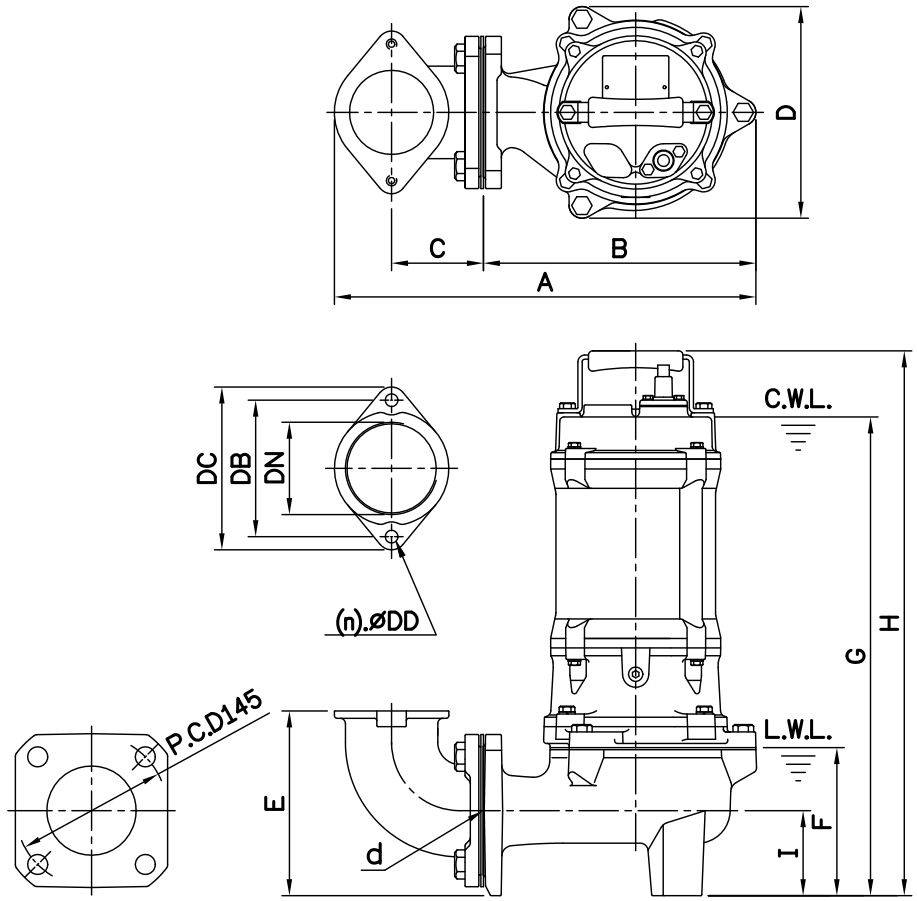


Flange

| Female Thread | |
|---|---|
| PF | NPT |

Dimensions–mm Weight:kg

| Model | d | A | B | C | D | E | F | G | H | I | WT1 | Elbow (Flange)Set | DN | DB | DC | DD | (n)QTY | WT2 |
|---|---|---|---|---|---|---|---|---|---|---|---|---|---|---|---|---|---|---|
| 80AFU21.5 1Ø | 80 | 397 | 260 | 83 | 202 | 171 | 140 | 511 | 574 | 81 | 35 | EB3-130 | 80 | 130 | 155 | 12 | 2 | 5 |
| 80AFU22.2 1Ø | 80 | 397 | 260 | 83 | 202 | 171 | 140 | 538 | 601 | 81 | 38 | EB3-130 | 80 | 130 | 155 | 12 | 2 | 5 |
| 80AFU21.5L 1Ø | 80 | 402 | 265 | 83 | 221 | 210 | 190 | 563 | 626 | 120 | 38 | EB3-130 | 80 | 130 | 155 | 12 | 2 | 5 |
| 80AFU22.2L 1Ø | 80 | 402 | 265 | 83 | 221 | 210 | 190 | 590 | 653 | 120 | 40 | EB3-130 | 80 | 130 | 155 | 12 | 2 | 5 |
| 80AFU21.5 3Ø | 80 | 397 | 260 | 83 | 202 | 171 | 140 | 456 | 519 | 81 | 32 | EB3-130 | 80 | 130 | 155 | 12 | 2 | 5 |
| 80AFU22.2 3Ø | 80 | 397 | 260 | 83 | 202 | 171 | 140 | 456 | 519 | 81 | 34 | EB3-130 | 80 | 130 | 155 | 12 | 2 | 5 |
| 80AFU21.5L 3Ø | 80 | 402 | 265 | 83 | 221 | 210 | 190 | 508 | 571 | 120 | 34 | EB3-130 | 80 | 130 | 155 | 12 | 2 | 5 |
| 80AFU22.2L 3Ø | 80 | 402 | 265 | 83 | 221 | 210 | 190 | 508 | 571 | 120 | 36 | EB3-130 | 80 | 130 | 155 | 12 | 2 | 5 |

Dimensions–inch Weight:lb

| Model | d | A | B | C | D | E | F | G | H | I | WT1 | Elbow (Flange)Set | DN | DB | DC | DD | (n)QTY | WT2 |
|---|---|---|---|---|---|---|---|---|---|---|---|---|---|---|---|---|---|---|
| 80AFU21.5 1Ø | 3 | 15 5/8 | 10 1/4 | 3 1/4 | 7 15/16 | 6 3/4 | 5 1/2 | 20 1/8 | 22 5/8 | 3 3/16 | 77 | EB3-130 | 3 | 5 1/8 | 6 1/8 | 1/2 | 2 | 11 |
| 80AFU22.2 1Ø | 3 | 15 5/8 | 10 1/4 | 3 1/4 | 7 15/16 | 6 3/4 | 5 1/2 | 21 3/16 | 23 11/16 | 3 3/16 | 84 | EB3-130 | 3 | 5 1/8 | 6 1/8 | 1/2 | 2 | 11 |
| 80AFU21.5L 1Ø | 3 | 15 13/16 | 10 7/16 | 3 1/4 | 8 11/16 | 8 1/4 | 7 1/2 | 22 3/16 | 24 5/8 | 4 3/4 | 84 | EB3-130 | 3 | 5 1/8 | 6 1/8 | 1/2 | 2 | 11 |
| 80AFU22.2L 1Ø | 3 | 15 13/16 | 10 7/16 | 3 1/4 | 8 11/16 | 8 1/4 | 7 1/2 | 23 1/4 | 25 1/16 | 4 3/4 | 88 | EB3-130 | 3 | 5 1/8 | 6 1/8 | 1/2 | 2 | 11 |
| 80AFU21.5 3Ø | 3 | 15 5/8 | 10 1/4 | 3 1/4 | 7 15/16 | 6 3/4 | 5 1/2 | 17 15/16 | 20 7/16 | 3 3/16 | 71 | EB3-130 | 3 | 5 1/8 | 6 1/8 | 1/2 | 2 | 11 |
| 80AFU22.2 3Ø | 3 | 15 5/8 | 10 1/4 | 3 1/4 | 7 15/16 | 6 3/4 | 5 1/2 | 17 15/16 | 20 7/16 | 3 3/16 | 75 | EB3-130 | 3 | 5 1/8 | 6 1/8 | 1/2 | 2 | 11 |
| 80AFU21.5L 3Ø | 3 | 15 13/16 | 10 7/16 | 3 1/4 | 8 11/16 | 8 1/4 | 7 1/2 | 20 | 22 1/2 | 4 3/4 | 75 | EB3-130 | 3 | 5 1/8 | 6 1/8 | 1/2 | 2 | 11 |
| 80AFU22.2L 3Ø | 3 | 15 13/16 | 10 7/16 | 3 1/4 | 8 11/16 | 8 1/4 | 7 1/2 | 20 | 22 1/2 | 4 3/4 | 79 | EB3-130 | 3 | 5 1/8 | 6 1/8 | 1/2 | 2 | 11 |

C.W.L.:Continuous Running Water Level
L.W.L.:Lowest Running Water Level

WT1:Pump Weight(Without Cable)
WT2:Elbow Set Weight

## DIMENSIONS NO: T3AFU222032-00

## MODEL: 80AFU21.5 / 22.2 / 21.5L / 22.2L 1Ø / 3Ø

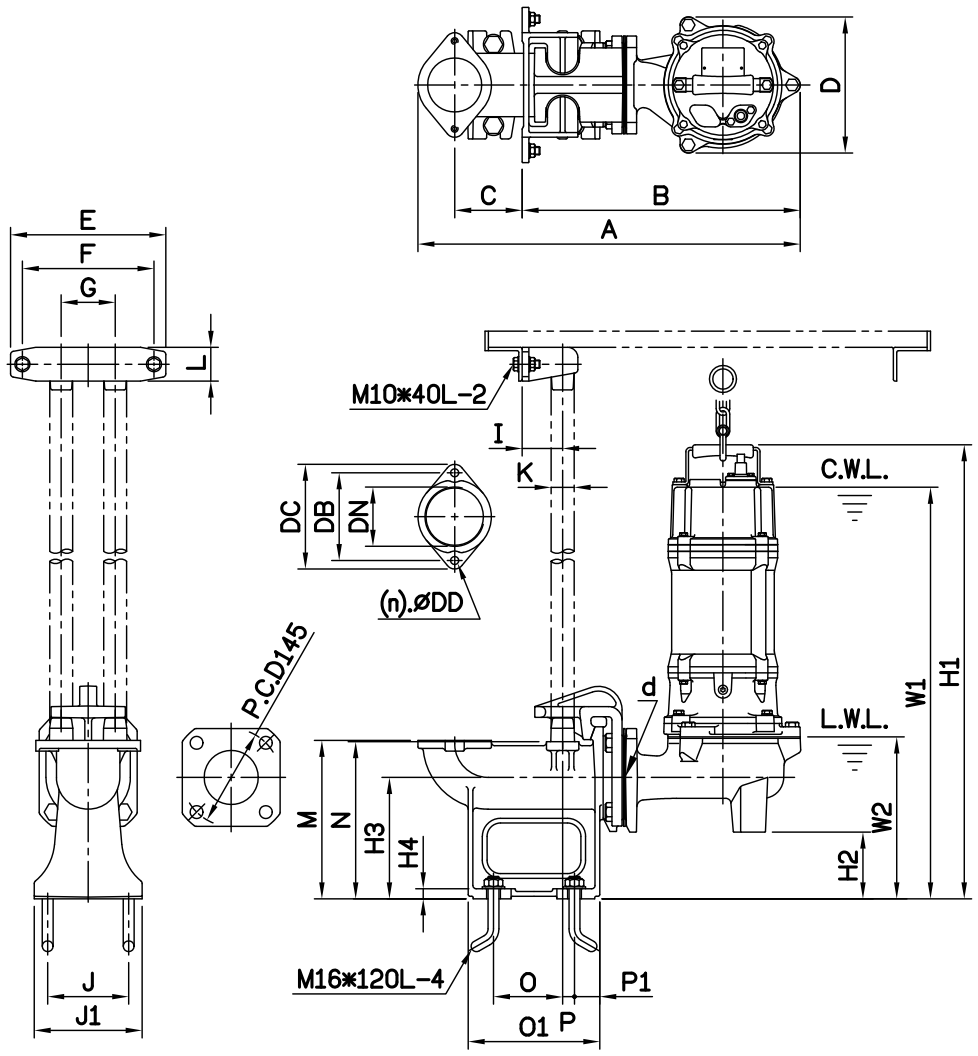


Flange

| Female Thread | |
|---|---|
| PF | NPT |

Dimensions-mm

| Elbow (Flange)Set | DN | DB | DC | DD | (n)QTY |
|---|---|---|---|---|---|
| EF3-130 | 80 | 130 | 155 | 12 | 2 |

Dimensions-inch

| Elbow (Flange)Set | DN | DB | DC | DD | (n)QTY |
|---|---|---|---|---|---|
| EF3-130 | 3 | 5 1/8 | 6 1/8 | 1/2 | 2 |

Dimensions-mm Weight:kg

| Model | d | A | B | C | D | E | F | G | I | J | J1 | K | L | M | N | O | O1 | P | P1 | W1 | W2 | H1 | H2 | H3 | H4 | WT1 | GRS Set | WT2 |
|---|---|---|---|---|---|---|---|---|---|---|---|---|---|---|---|---|---|---|---|---|---|---|---|---|---|---|---|---|
| 80AFU21.5 1Ø | 80 | 567 | 412 | 100 | 202 | 230 | 195 | 80 | 60 | 120 | 160 | 1¼" | 50 | 235 | 233 | 103 | 195 | 18 | 38 | 610 | 239 | 673 | 99 | 180 | 15 | 35 | T2-80 | 20 |
| 80AFU22.2 1Ø | 80 | 567 | 412 | 100 | 202 | 230 | 195 | 80 | 60 | 120 | 160 | 1¼" | 50 | 235 | 233 | 103 | 195 | 18 | 38 | 637 | 239 | 700 | 99 | 180 | 15 | 38 | T2-80 | 20 |
| 80AFU21.5L 1Ø | 80 | 572 | 417 | 100 | 221 | 230 | 195 | 80 | 60 | 120 | 160 | 1¼" | 50 | 235 | 233 | 103 | 195 | 18 | 38 | 623 | 250 | 686 | 60 | 180 | 15 | 38 | T2-80 | 20 |
| 80AFU22.2L 1Ø | 80 | 572 | 417 | 100 | 221 | 230 | 195 | 80 | 60 | 120 | 160 | 1¼" | 50 | 235 | 233 | 103 | 195 | 18 | 38 | 650 | 250 | 713 | 60 | 180 | 15 | 40 | T2-80 | 20 |
| 80AFU21.5 3Ø | 80 | 567 | 412 | 100 | 202 | 230 | 195 | 80 | 60 | 120 | 160 | 1¼" | 50 | 235 | 233 | 103 | 195 | 18 | 38 | 555 | 239 | 618 | 99 | 180 | 15 | 32 | T2-80 | 20 |
| 80AFU22.2 3Ø | 80 | 567 | 412 | 100 | 202 | 230 | 195 | 80 | 60 | 120 | 160 | 1¼" | 50 | 235 | 233 | 103 | 195 | 18 | 38 | 555 | 239 | 618 | 99 | 180 | 15 | 34 | T2-80 | 20 |
| 80AFU21.5L 3Ø | 80 | 572 | 417 | 100 | 221 | 230 | 195 | 80 | 60 | 120 | 160 | 1¼" | 50 | 235 | 233 | 103 | 195 | 18 | 38 | 568 | 250 | 631 | 60 | 180 | 15 | 34 | T2-80 | 20 |
| 80AFU22.2L 3Ø | 80 | 572 | 417 | 100 | 221 | 230 | 195 | 80 | 60 | 120 | 160 | 1¼" | 50 | 235 | 233 | 103 | 195 | 18 | 38 | 568 | 250 | 631 | 60 | 180 | 15 | 36 | T2-80 | 20 |

Dimensions-inch Weight:lb

| Model | d | A | B | C | D | E | F | G | I | J | J1 | K | L | M | N | O | O1 | P | P1 | W1 | W2 | H1 | H2 | H3 | H4 | WT1 | GRS Set | WT2 |
|---|---|---|---|---|---|---|---|---|---|---|---|---|---|---|---|---|---|---|---|---|---|---|---|---|---|---|---|---|
| 80AFU21.5 1Ø | 3 | 22 5/16 | 16 1/4 | 3 15/16 | 7 15/16 | 9 1/16 | 7 11/16 | 3 1/8 | 2 3/8 | 4 3/4 | 6 5/16 | 1 1/4 | 2 | 9 1/4 | 9 3/16 | 4 1/16 | 7 11/16 | 11/16 | 1 1/2 | 24 | 9 7/16 | 26 1/2 | 3 7/8 | 7 1/16 | 9/16 | 77 | T2-80 | 43 |
| 80AFU22.2 1Ø | 3 | 22 5/16 | 16 1/4 | 3 15/16 | 7 15/16 | 9 1/16 | 7 11/16 | 3 1/8 | 2 3/8 | 4 3/4 | 6 5/16 | 1 1/4 | 2 | 9 1/4 | 9 3/16 | 4 1/16 | 7 11/16 | 11/16 | 1 1/2 | 25 1/16 | 9 7/16 | 27 9/16 | 3 7/8 | 7 1/16 | 9/16 | 84 | T2-80 | 43 |
| 80AFU21.5L 1Ø | 3 | 22 1/2 | 16 7/16 | 3 15/16 | 8 1/16 | 9 1/16 | 7 11/16 | 3 1/8 | 2 3/8 | 4 3/4 | 6 5/16 | 1 1/4 | 2 | 9 1/4 | 9 3/16 | 4 1/16 | 7 11/16 | 11/16 | 1 1/2 | 24 1/2 | 9 13/16 | 27 | 2 3/8 | 7 1/16 | 9/16 | 84 | T2-80 | 43 |
| 80AFU22.2L 1Ø | 3 | 22 1/2 | 16 7/16 | 3 15/16 | 8 1/16 | 9 1/16 | 7 11/16 | 3 1/8 | 2 3/8 | 4 3/4 | 6 5/16 | 1 1/4 | 2 | 9 1/4 | 9 3/16 | 4 1/16 | 7 11/16 | 11/16 | 1 1/2 | 25 9/16 | 9 13/16 | 28 1/16 | 2 3/8 | 7 1/16 | 9/16 | 88 | T2-80 | 43 |
| 80AFU21.5 3Ø | 3 | 22 5/16 | 16 1/4 | 3 15/16 | 7 15/16 | 9 1/16 | 7 11/16 | 3 1/8 | 2 3/8 | 4 3/4 | 6 5/16 | 1 1/4 | 2 | 9 1/4 | 9 3/16 | 4 1/16 | 7 11/16 | 11/16 | 1 1/2 | 21 7/8 | 9 7/16 | 24 5/16 | 3 7/8 | 7 1/16 | 9/16 | 71 | T2-80 | 43 |
| 80AFU22.2 3Ø | 3 | 22 5/16 | 16 1/4 | 3 15/16 | 7 15/16 | 9 1/16 | 7 11/16 | 3 1/8 | 2 3/8 | 4 3/4 | 6 5/16 | 1 1/4 | 2 | 9 1/4 | 9 3/16 | 4 1/16 | 7 11/16 | 11/16 | 1 1/2 | 21 7/8 | 9 7/16 | 24 5/16 | 3 7/8 | 7 1/16 | 9/16 | 75 | T2-80 | 43 |
| 80AFU21.5L 3Ø | 3 | 22 1/2 | 16 7/16 | 3 15/16 | 8 1/16 | 9 1/16 | 7 11/16 | 3 1/8 | 2 3/8 | 4 3/4 | 6 5/16 | 1 1/4 | 2 | 9 1/4 | 9 3/16 | 4 1/16 | 7 11/16 | 11/16 | 1 1/2 | 22 3/8 | 9 13/16 | 24 13/16 | 2 3/8 | 7 1/16 | 9/16 | 75 | T2-80 | 43 |
| 80AFU22.2L 3Ø | 3 | 22 1/2 | 16 7/16 | 3 15/16 | 8 1/16 | 9 1/16 | 7 11/16 | 3 1/8 | 2 3/8 | 4 3/4 | 6 5/16 | 1 1/4 | 2 | 9 1/4 | 9 3/16 | 4 1/16 | 7 11/16 | 11/16 | 1 1/2 | 22 3/8 | 9 13/16 | 24 13/16 | 2 3/8 | 7 1/16 | 9/16 | 79 | T2-80 | 43 |

C.W.L.:Continuous Running Water Level
L.W.L.:Lowest Running Water Level

WT1:Pump Weight(Without Cable)
WT2:GRS Set Weight

## SECTIONAL VIEWS NO: 03AFU222030-0

## MODEL: 80AFU21.5 / 22.2 / 21.5L / 22.2L 3Ø

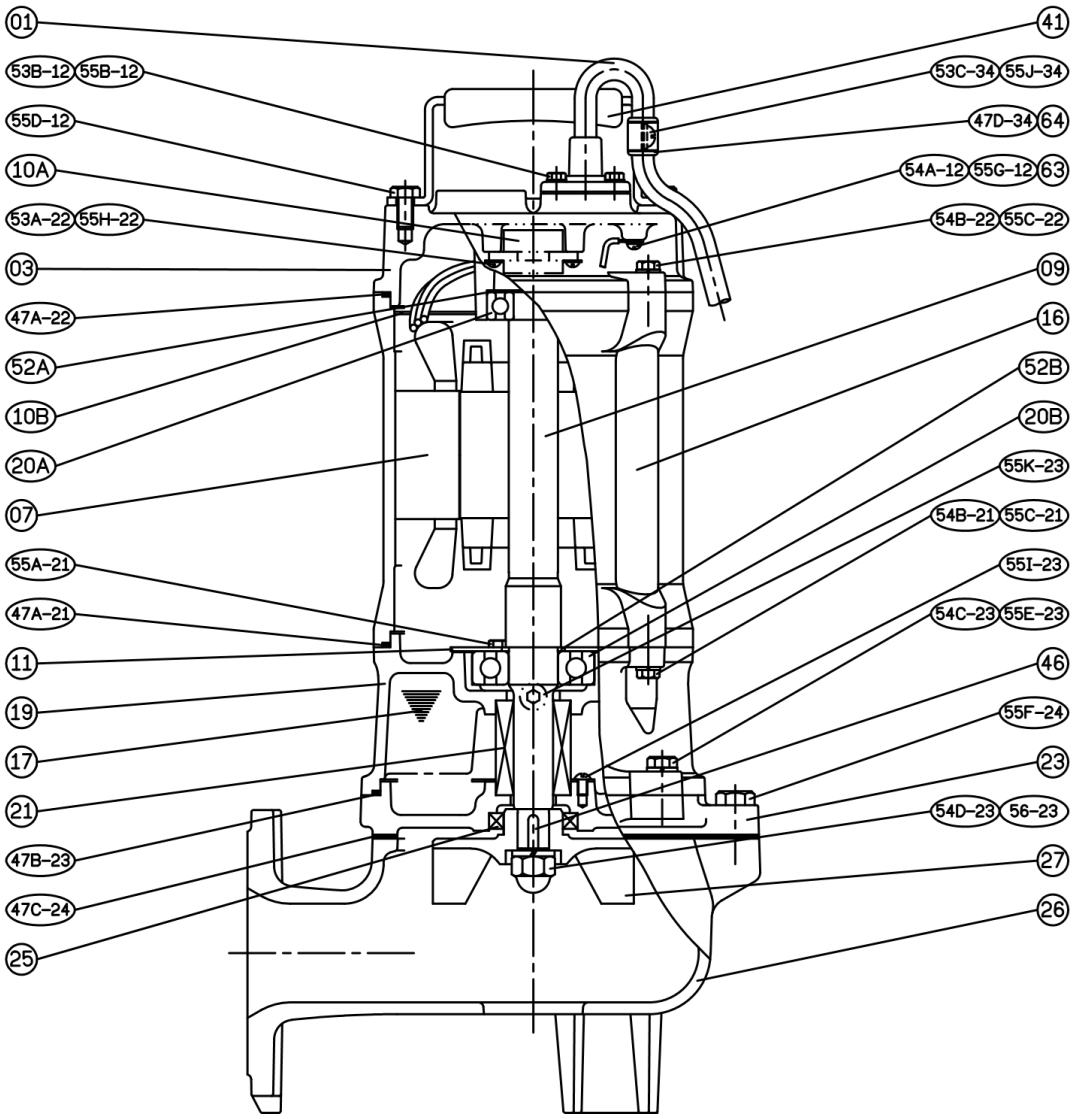


| Número | Nombre de la pieza | Material | Cantidad |
|---|---|---|---|
| 01 | Cable | | 1 |
| 03 | Cubierta Superior | FC200 | 1 |
| 07 | Estator | | 1 |
| 09 | Extremo del Eje | SUS403 | 1 |
| 10A | Protector Auto-corte | | 1 |
| 10B | Placa Protectora | | 1 |
| 11 | Fijador de Rodamiento | SPCC | 1 |
| 16 | Bastidor del Motor | FC200 | 1 |
| 17 | Lubricante | | |
| 19 | Soporte del Rodamiento | FC200 | 1 |
| 20A | Rodamiento | | 1 |
| 20B | Rodamiento | | 1 |
| 21 | Sello Mecánico | CA/CE & SiC/SiC | 1 |
| 23 | Soporte Sello Mecánico | FC200 | 1 |

| Número | Nombre de la pieza | Material | Cantidad |
|---|---|---|---|
| 25 | Sello de Aceite | NBR | 1 |
| 26 | Carcasa | FC200 | 1 |
| 27 | Impulsor | FC200 | 1 |
| 41 | Asa | SUS304 | 1 |
| 46 | Llave del Impulsor | SUS304 | 1 |
| 47 | Kit de Empaques | | |
| | | | |
| | | | |
| | | | |
| | | | |
| | | | |
| | | | |
| | | | |
| | | | |